MANUFACTURERS AWA SUPERVISED SERVICE

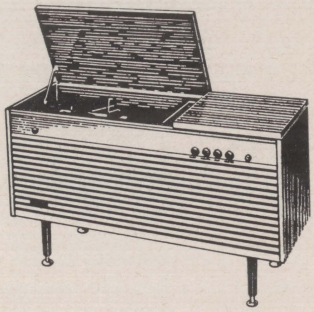

A.W.A. STEREOPHONIC RADIOLAGRAM

Models B50 and B50Z

GENERAL DESCRIPTION

These models are seven valve, A.C. operated stereophonic radiograms designed for the reception of the Medium Wave Band and for the reproduction of both monophonic and stereophonic recordings.

Model B50 is equipped with BSR UA25 changer. Model B50Z is equipped with a Garrard 1000 changer.

ELECTRICAL AND MECHANICAL SPECIFICATIONS

Frequency Range ..... 525-1,650 Kc/s

Intermediate Frequency ..... 455 Kc/s

Power Supply Rating ..... 200-260 volts a.c. 50 c.p.s.

POWER CONSUMPTION:

Receiver Chassis ..... 50 watts

Record Changer ..... 20 watts

UNDISTORTED POWER OUTPUT: 1.5 watts per channel

LOUDSPEAKERS:

9″ x 6″, one per channel 52849

V.C. IMPEDANCE: ..... 15 ohms at 400 c.p.s.

DIMENSIONS:

Height ..... 26″
Width ..... 45¼″
Depth ..... 15½″
Height of Legs ..... 7½″
Weight ..... 88 lbs.

VALVE COMPLIMENT:

V1 Radiotron 6BE6 ..... Converter
V2 Radiotron 6N8 .... I.F. Amplifier, Detector and A.G.C.
V3 Radiotron 6AU6 .... Left-hand channel Audio Amplifier
V4 Radiotron 6AU6 .... Right-hand channel Audio Amplifier
V5 Radiotron 6AQ5 ..... Left-hand channel output
V6 Radiotron 6AQ5 ..... Right-hand channel output
V7 Radiotron 6V4 ..... Rectifier

DIAL CORD REPLACEMENT:

Fig. 1 shows the route of the cord and the method of attachment.

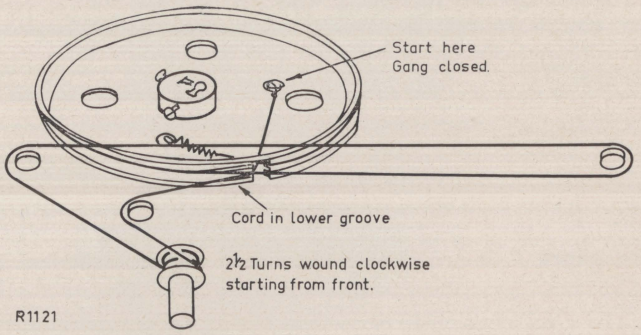

LAMP REPLACEMENT:

Both 12 and 6 volt lamps are used and are accessible on removing the cabinet back.

The bezel light is a 12 volt, while the dial lamps are 6 volt.

SPEAKER PHASING:

It is essential that speakers are correctly phased. For this reason all speakers have a + mark against one of the voice coil terminals. This indicates that when a positive voltage is applied to this terminal, the cone will move away from the magnet housing. These phasing marks are indicated on the circuit diagram.

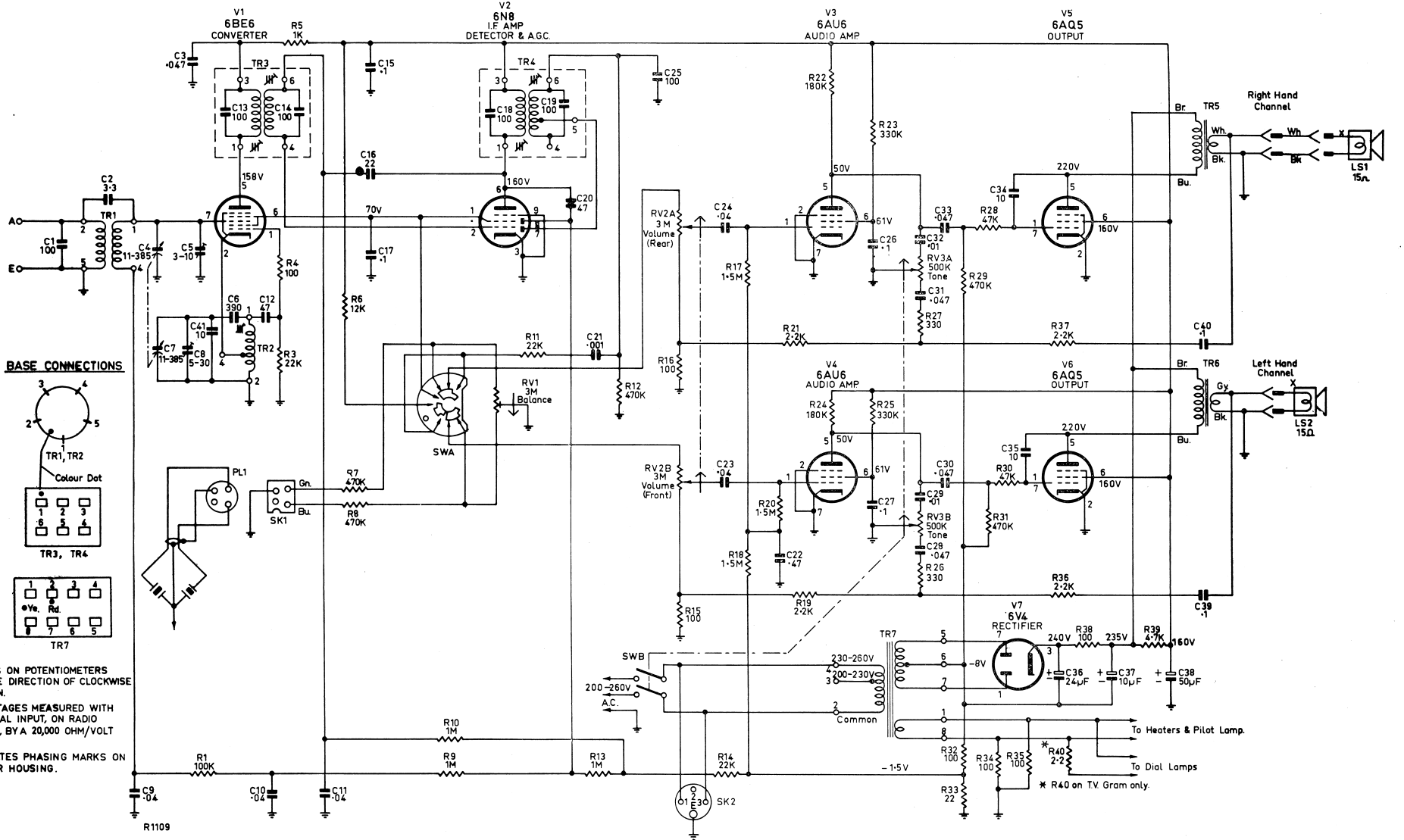

CIRCUIT VARIATIONS.

C41 should read 12pf.

R41 a 1 megohm resistor is wired across the active leads of the record cartridge when BSR changer is fitted.

CIRCUIT CODE

CODE No.	DESCRIPTION			PART No.
	RESISTORS			
	All Resistors composition type unless otherwise stated.			
R1	100K ohms	±10%	½ watt	616017
R2	Not Used			
R3	22K ohms	±10%	½ watt	613653
R4	100 ohms	±10%	½ watt	604031
R5	1K ohms	±10%	½ watt	608025
R6	12K ohms	±10%	1 watt	612514
R7	470K ohms	±10%	½ watt	617356
R8	470K ohms	±10%	½ watt	617356
R9	1 Megohm	±10%	½ watt	618016
R10	1 Megohm	±10%	½ watt	618016
R11	22K ohms	±10%	½ watt	613653
R12	470K ohms	±10%	½ watt	617356
R13	1 Megohm	±10%	½ watt	618016
R14	22K ohms	±10%	½ watt	613653
R15	100 ohms	±10%	½ watt	604031
R16	100 ohms	±10%	½ watt	604031
R17	1.5 Megohms	±10%	½ watt	618260
R18	1.5 Megohms	±10%	½ watt	618260
R19	2.2K ohms	±10%	½ watt	609442
R20	1.5 Megohms	±10%	½ watt	618260
R21	2.2K ohms	±10%	½ watt	609442
R22	180K ohms	±10%	1 watt	616568
R23	330K ohms	±10%	½ watt	617108
R24	180K ohms	±10%	1 watt	616568
R25	330K ohms	±10%	½ watt	617108
R26	330 ohms	±10%	½ watt	605959
R27	330 ohms	±10%	½ watt	605959
R28	47K ohms	±10%	½ watt	614961
R29	470K ohms	±10%	½ watt	617356
R30	47K ohms	±10%	½ watt	614961
R31	470K ohms	±10%	½ watt	617356
R32	100 ohms	±10%	1 watt	604037
R33	22 ohms	±10%	½ watt W.W.	602318
R34	100 ohms	±10%	½ watt	604031
R35	100 ohms	±10%	½ watt	604031
R36	2.2K ohms	±10%	½ watt	609442
R37	2.2K ohms	±10%	½ watt	609442
R38	100 ohms	±10%	1 watt	604050
R39	4.7K ohms	±10%	2 watts	610962
R40	Not Used			
R41	1 Megohm	±10%	½ watt	618016
RV1	3 Megohms Curve A Carbon, Balance			620798
RV2A	3 Megohms Curve C Carbon		Tone	620914
RV2B	3 Megohms Curve C Carbon			
RV3A	500K ohms Curve F Carbon		Volume	620979
RV3B	500K ohms Curve F Carbon			

CODE No.	DESCRIPTION	PART No.
	CAPACITORS	
C1	100pF ±10% N750 tubular	222224
C2	3.3pF ±10% NPO disc	220164
C3	0.047μF ±10% 400VW polyester	226802
C4	11—385pF tuning Aerial	60090
C5	3—10pF trimmer Aerial	33155
C6	390pF ±2½% 600V polystyrene	223886
C7	11—385pF tuning Oscillator	60090
C8	5—30pF trimmer Oscillator	231136
C9	0.04μF ±20% 200VW AEE W99	228750
C10	0.04μF ±20% 200VW AEE W99	228750
C11	0.04μF ±20% 200VW AEE W99	228750
C12	47pF ±10% N750 tubular	221434
C13	100pF ±5% 600VW polystyrene in TR3	222222
C14	100pF ±5% 600VW polystyrene in TR3	222222
C15	0.1μF ±10% 400VW polyester	227085
C16	22pF ±5% NPO tubular	220890
C17	0.1μF ±10% 400VW polyester	227085
C18	100pF ±5% 600VW polystyrene in TR4	222222
C19	100pF ±5% 600VW polystyrene in TR4	222222
C20	47pF ±10% N750 tubular	221434
C21	0.001μF ±10% 400VW polyester	225060
C22	0.47μF +80% —20% 25VW disc	227494
C23	0.04μF ±20% 200VW AEE W99	228750
C24	0.04μF ±20% 200VW AEE W99	228750
C25	100pF ±10% N750 tubular	222224
C26	0.1μF ±10% 400VW polyester	227085
C27	0.1μF ±10% 400VW polyester	227085
C28	0.047μF ±10% 400VW polyester	226802
C29	0.01μF ±10% 160VW polyester	226378
C30	0.047μF ±10% 400VW polyester	226802
C31	0.047μF ±10% 400VW polyester	226802
C32	0.01μF ±10% 160VW polyester	226378
C33	0.047μF ±10% 400VW polyester	226802
C34	10pF ±10% NPO tubular	221509
C35	10pF ±10% NPO tubular	221509
C36	24μF 300VW Electrolytic	222812
C37	10μF 300VW Electrolytic	228775
C38	50μF 200VW Electrolytic	229590
C39	0.1μF ±20% 200VW AEE W48	228931
C40	0.1μF ±20% 200VW AEE W48	228931
C41	12pF ±10% N1500 disc	220572
	TRANSFORMERS	
TR1	Aerial	52768
TR2	Oscillator	63427
TR3	1st I.F.	51052
TR4	2nd I.F.	51054
TR5	Output	53529A
TR6	Output	53529A
TR7	Power	25807
	VALVES	
V1	Radiotron 6BE6	
V2	Radiotron 6N8	
V3	Radiotron 6AU6	
V4	Radiotron 6AU6	
V5	Radiotron 6AQ5	
V6	Radiotron 6AQ5	
V7	Radiotron 6V4	
	MISCELLANEOUS	
LS1	Speaker 9″ x 6″	52849
LS2	Speaker 9″ x 6″	52849
PL1	P.U. Input Plug	
SK1	P.U. Input Socket	793287
SK2	Phono Motor Power Socket	67237
SWA	P.U./Radio Switch	67232
SWB	Power Switch (on RV3)	

CHASSIS REMOVAL:

Remove the cabinet back and disconnect the aerial and earth leads.

Disconnect the speaker leads, power, phono motor power and pick-up input plugs.

Remove the control knobs.

Remove three Philips Head screws retaining the escutcheon and remove same.

Remove the bezel lamp holder from its bracket.

Remove the self-tapping screw retaining the dial backing plate.

Remove two nuts holding the chassis to the cabinet front.

The chassis may now be lifted from the cabinet.

Re-assembly is the reverse of the above procedure.

RECORD CHANGER REMOVAL:

Remove the cabinet back.

Disconnect the phono motor power and pick-up input plugs.

Viewed from underneath the base board will be seen the two clips securing the record changer.

Swing the clips over so that they are parallel with the screws and lift the record changer free.

ALIGNMENT PROCEDURE

MANUFACTURER'S SETTING OF ADJUSTMENTS:

The receiver is tested by the manufacturer with precision instruments, and all adjusting screws are sealed. Re-alignment should be necessary only when components in tuned circuits are repaired or replaced or when it is found that the seals over the adjusting screws have been broken. It is specially important that the adjustments should not be altered unless the correct testing instruments, listed below, are used.

Under no circumstances should the plates of the ganged tuning capacitor be bent as the unit is accurately aligned during manufacture and can only be re-adjusted by skilled operators using special equipment.

For all alignment operations, keep the generator output as low as possible to avoid a.g.c. action. Also, keep the volume control in the maximum clockwise position.

TESTING INSTRUMENTS:

(1) Signal Generator, modulated at 400 c.p.s., or

(2) Modulated Oscillator. If the modulated oscillator is used, connect a 220K ohms non-inductive resistor across the output terminals.

(3) Output Meter—15 ohms impedance.

In order to avoid damage to output valves and associated circuitry when the chassis is being tested, it is necessary to provide a load on both audio amplifiers. Hence, a 15 ohms, 3 watt resistor should be connected to the voice coil terminals of the amplifier which is not loaded with the output meter.

Set the balance control to the position which gives maximum audio output on the output meter.

ALIGNMENT TABLE

ORDER	CONNECT GENERATOR TO:	TUNE GENERATOR TO:	TUNE RECEIVER TO:	ADJUST FOR MAXIMUM PEAK OUTPUT:
1	Grid of 6BE6 (Rear Section of gang)	455 Kc/s	Gang fully closed	Top and bottom cores in TR4 and TR3
Repeat adjustments until maximum output is obtained				
2	Aerial Lead	600 Kc/s	600 Kc/s	Osc. Core Adj. (TR2)*
3	Aerial Lead	1,650 Kc/s	Gang fully open	Osc. Trimmer (C8)
4	Aerial Lead	1,500 Kc/s	1,500 Kc/s	Aer. Trimmer (C5)
Repeat adjustments 2, 3 and 4.				

* Rock the tuning control back and forth through the signal.

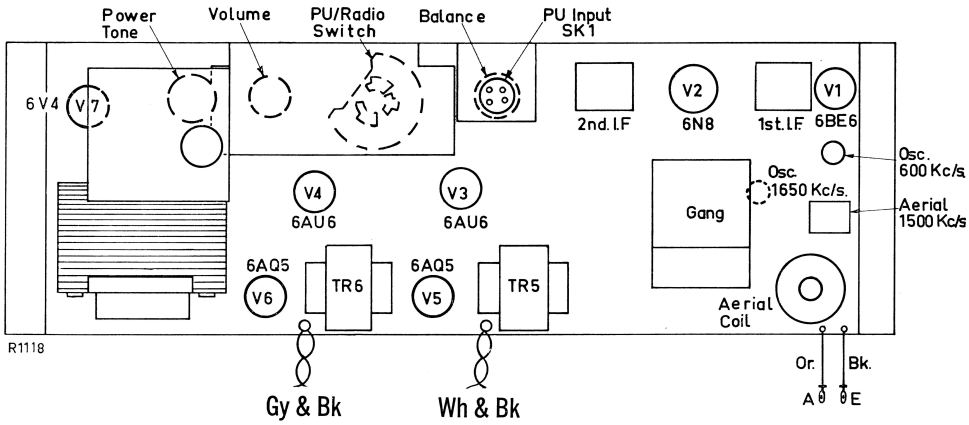

CHASSIS LAYOUT

SOCKET VOLTAGES

VALVES	CATHODE TO CHASSIS VOLTS	SCREEN GRID TO CHASSIS VOLTS	ANODE TO CHASSIS VOLTS	ANODE CURRENT mA	HEATER VOLTS
6BE6 Converter	0	70	160	2	6.3
6N8 I.F. Amp., Det., AGC	0	70	160	5	6.3
6AU6 Audio Amp.	0	61	50	0.75	6.3
6AU6 Audio Amp.	0	61	50	0.75	6.3
6AQ5 Audio Output	0	160	220	25	6.3
6AQ5 Audio Output	0	160	220	25	6.3
6V4 Rectifier	240	—	235	—	6.3

Total H.T. Current = 70mA
Measured with 240 volts A.C. supply (with selector switch in radio position). No signal input. Volume Control maximum clockwise. Voltmeter 20,000 ohms per volt. Measurements taken on highest scale giving accurate readable deflection.

D.C. RESISTANCE OF WINDINGS

WINDING	D.C. RESISTANCE IN OHMS
Aerial Transformer TR1:	
Primary	32
Secondary	1.5
Oscillator Transformer TR2	3.5
I.F. Transformers TR3 and TR4	18

WINDING	D.C. RESISTANCE IN OHMS
Output Transformers TR5 and TR6:	
Primary	360
Secondary	1.8
Power Transformer TR7:	
Primary	50
H.T. Secondary	450
L.T. Secondary	*

* Less than 1 ohm.
The above readings were taken on a standard chassis, but substitution of materials during manufacture may cause variations and it should not be assumed that a component is faulty if a slightly different reading is obtained.

MECHANICAL REPLACEMENT PARTS

Item	Part No.
Badge, "A.W.A."	67271/2
Badge, "Radiola"	67259
Baffle, Speaker	67283
Bezel, Indicator	67263/1
Bezel, Lamp (12V)	428147
Buffer, Rubber	37379
Cabinet (B50)	60288
Cabinet (B50Z)	60288/1
Cabinet, Back	67276
Clamp, Body, Power Cable	208056
Clamp, Lock, Power Cable	208057
Circlip, Drive Spindle Retaining	2537
Circlip, Pulley, Retaining	4885
Dial Lamp (6V)	428105
Dial Scale	65032
Drive Drum Assembly	62219
Drive Spindle Assembly	67257
Escutcheon	67267
Gang Mounting:	
Bracket, Gang Mounting	67252
Gang Assembly	60090
Grommet (3)	36826/2
Screw, Ch/Hd 4BA x 5/16"	714010
Spacer (3)	35923
Washer, Flat, 4BA (3)	13156
Washer, I.T.L., 4BA (3)	921204

Item	Part No.
Hinge, Lid	45914/2
Holder, Dial Scale Lamps	4195/3
Holder, Bezel Lamp	4195/2
Insulator, Power Switch	38469
Knob, Front Controls (4)	67274
Knob, Tuning	67249
Legs	67260
Pointer Assembly	67278
Pulley, Dial Cord (3)	17716
Record Changer Ass'y, B50:	
Cartridge, BSR Ceramic	C1
Changer Ass'y, BSR UA25	201269
Stylus Replacement	ST4
Record Changer Ass'y, B50Z:	
Cartridge, Sonotone Ceramic	8TA
Changer Ass'y, Garrard 1,000	201271
Stylus Replacement	N8TA D/S
Shield, Bezel Lamp	42924
Shield, Dial Scale Lamps	67289
Spring, Tension, Dial Cord	40540
Support, Lid, Anodeon Type	7227/001/01
Trim, Horizontal, Bottom	67264
Trim, Horizontal, Top	67266
Washer, Aer. and Osc. Coil Mtg.	66709

NOTE: When ordering spares, always quote the above Part Numbers, and in the case of coloured parts such as knobs, etc., also quote colour.